info@tekno-mp.com - http://www.tekno-mp.com



TV series | TV 400

Vertical drive systems

APPLICATIONS

// Warehouse trucks

Counterbalanced forklift trucks, Order pickers,

// AGV / AGC

AGVs,

// Electric vehicles

Airport,

AVAILABLE OPTIONS

drive unit tv 400

- Max wheel torque in acceleration 2600 Nm
- Max wheel torque continuously 868 Nm
- Max load on the gearbox 4300 kg
- Gear ratio up to 1/24.4

wheel size

- Ø 406 x 178 mm
- Ø 457 x 229 mm

traction motor

- Type AC, DC
- Voltage from 48V to 80V
- Power up to 10 kW

brake

- Electromagnetic
- Voltage from 48V to 80V
- Static brake torque up to 120 Nm
- Hand release lever available

steering options

- Pinion Z 22, Crown Z 138

powersteering unit

- Type AC
- Voltage from 48V to 80V
- Power up to 1 kW

plate

Available with set up for:

Benefits

- Drive unit for heavy duty machines with Ø 400mm wheel
- Low noise ground gears
- Reduced backlash
- Fully oil lubricated gearbox
- Possibility of full integration with traction motor, steering system, plate and electronics
- High efficiency 96%
- 100% tested and certified drive system
- Wide range of motors
- Easy maintenance
- ISO9001 and ISO14001 certified
- Made in Italy

- Potentiometer pinion
- Position proxy



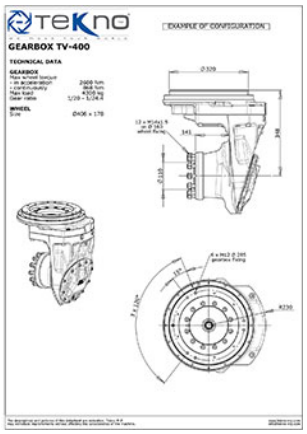



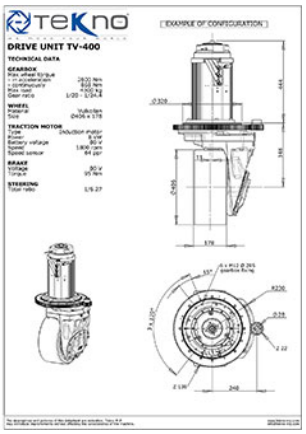



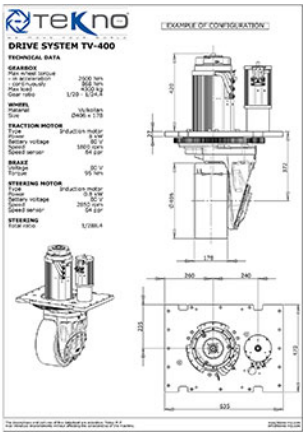

Tekno MP srl - via Morandi 10, 21040 Caronno Varesino (VA) - ITALY - tel (+39) 0331760511 - fax (+39) 0331760501